MOEN® 摩恩

净洁不锈钢厨盆

安装使用说明书

Easy-cleaning Stainless Steel Sink

INSTALLATION INSTRUCTIONS

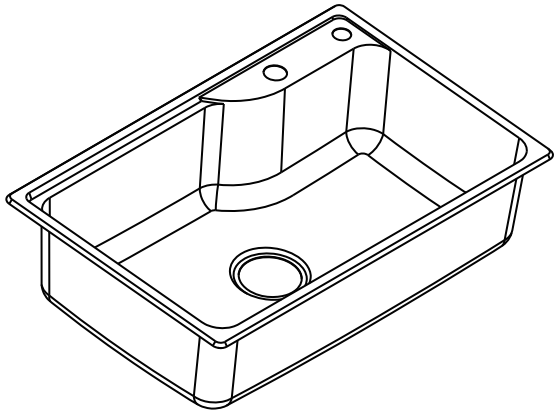

如需安装支持，配件丢失等，请联系MOEN。
(中国) 400-630-8866
www.moen.cn

PLEASE CONTACT MOEN FIRST
For Installation Help, Missing or Replacement Parts
(China) 400-630-8866
www.moen.cn

图片仅供参考
（款式因型号而异）

Image is for reference only
(Style varies by model)

推荐工具

为了安全和让安装和替换变得容易，Moen建议您使用以下工具：

HELPFUL TOOLS

For safety and ease of replacement, Moen recommends the use of these helpful tools.

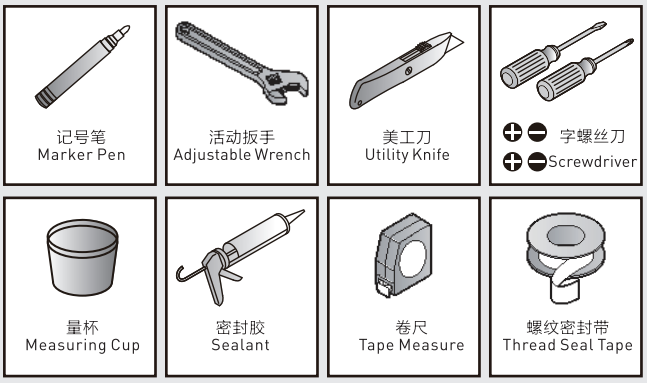

记录购买的型号：
（保存安装说明书以备将来参考）

Record Purchased Model Number:
(Save instruction sheet for future reference)

请在安装前仔细阅读此安装说明书。
由于此指导书包含了重要的产品保养信息，故需妥善保管以便日后查询。
Please read the instructions completely before installing new sink.
These instructions should be left with the consumer as they contain important maintenance information. Keep in a safe place for future reference.

原材料厚度：1.0mm
执行标准：GB/T 38474-2020
制作商：富俊汇赢科技（上海）有限公司
电话：400-630-8866
地址：中国（上海）自由贸易试验区新杨公路1800弄1号4幢207室

请注意仔细分清您所安装的厨盆为台上盆还是台下盆。
CAUTION: Please check whether the sink is self-rimming or undercounter installation.

台上盆安装说明

安装台的准备：清理掉所有脏物和会刮伤水槽边缘的杂物。

Self-rimming Installation

Prepare countertop by cleaning off all dirt and abrasives which could scratch sink rim.

1

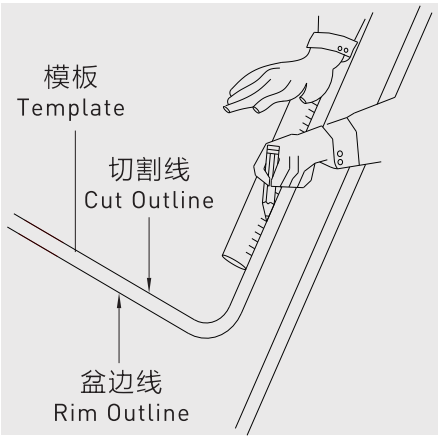

将开孔板放置到要安装位置。**小心：明确开孔的准确位置。沿开孔板台上安装线边沿画线，不要使用擦不掉的记号笔。**

Place the cut-out template in the position to be installed.
CAUTION: Identify the exact location of the opening. Draw a line along the edge of the topmount installation line of the template. Do not use indelible markers, etc., which can not be removed later.

2

在切割线内侧钻一个直径为3/8”（10mm）的孔，用以放入切割锯的锯条，沿着所画的切割线切割出厨盆的位置。切割完时，请扶住切除部分以免切割口破裂，用砂纸打平切口处。在安装紧固前，把厨盆放入切口内用以检查切口大小入四角位置是否合适。

First drill a 3/8" (about 10mm) dia. hole for the saber saw blade on the inside edge of the cutout. Cut sink opening using the cutout line as your guide. Brace cutout portion as you complete cut to avoid splintering edge of hole. Sand edges smooth. Before installing clamps, check fit by placing sink in cutout. Make sure corners seat properly.

3

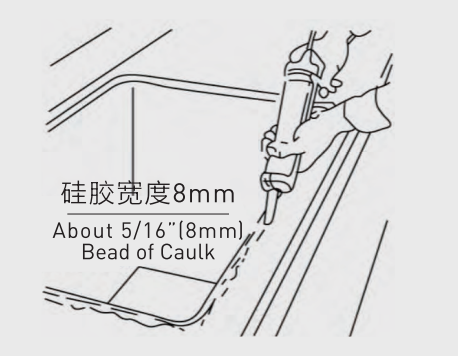

从轮廓线处填入透明的硅胶，胶水宽度为5/16”（8mm），硅胶需连续铺满整个轮廓以保证台面封水)。

Apply a light type of caulking compound completely around all edges of sink opening. Use 5/16" (about 8mm) bead or compound.

4

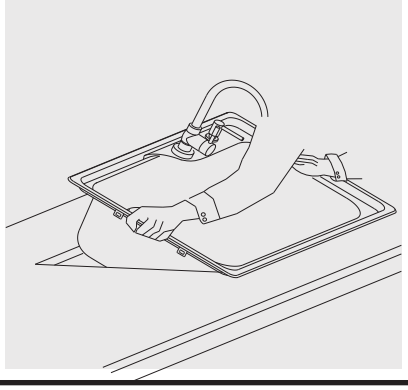

在放置厨盆前先安装龙头（请参考龙头说明书）。
放置厨盆：将厨盆前缘紧贴台面开口处的前缘并覆盖胶，再将厨盆慢慢放下。

Install faucet first before installing the sink by referring to the Instruction Sheet supplied with faucet.
Position sink by tilting back of sink up. Place front rim of sink close to front edge of sink opening, covering caulking with rim lower back of sink into opening position carefully.

INSTMOEN INSTMOEN-1A 500000569524
Released.001

5

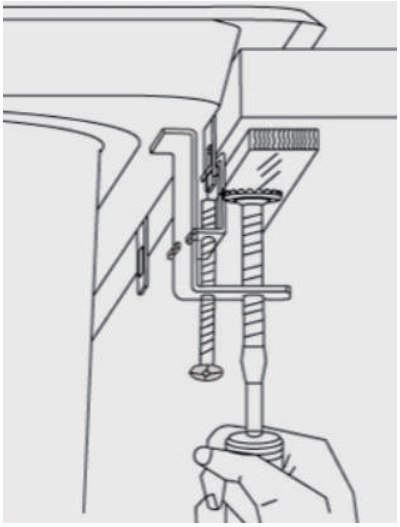

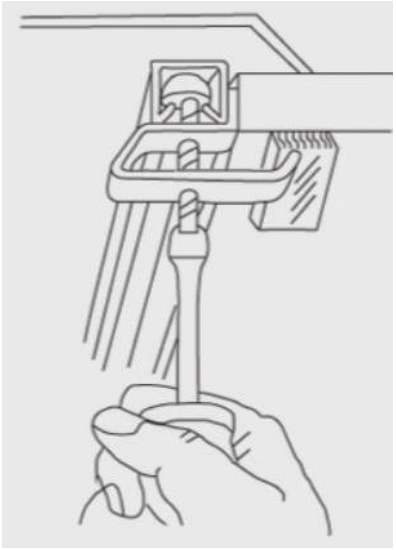

L型

U型

L片

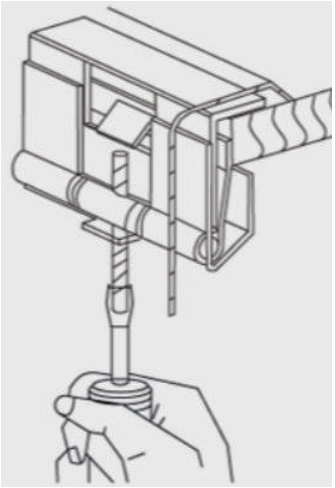

请根据不同的厨盆紧固件（L型条/U型条/L片）来插入对应的挂钩，用螺丝刀锁紧挂钩。

小心：请勿过度紧锁挂钩，避免导致厨盆损坏。
注意：如果需要，紧固件下面根据台面板厚度可加适当厚度的木板，达到紧固效果。

Please insert the corresponding clamps according to different kitchen sink fasteners (L-shaped strip/U-shaped strip/L-shaped piece). Use a screwdriver to tighten the clamps.

CAUTION: Improper tightening of clamps could result in improper installation or cause damage to sink.
NOTICE: If needed, put short wooden bar to adjust the gap between countertop and claw of clamps.

6

① 将紧固件从中间开始向两边缘逐个用手拧紧。
② 再次检查厨盆在台面上的位置。
③ 对所有紧固件再拧1/4圈。
注意：不要过度拧紧。

① Tighten the fasteners manully, starting at center and working toward sides.
② Re-check the sink position on countertop.
③Tighten all fasteners on additional quarter turn.
NOTICE: Do Not Overtighten.

7

① 把台面上的复合胶以及铅笔划痕清除干净。
② 用湿布或海棉和温和的清洁剂去除厨盆上的任何油渍和手印，可掺入一些磨料，轻轻擦洗。
安装完毕。

① Clean up all excess caulking and pencil marks from countertop.
② Use a wet cloth or sponge and a mild detergent to remove any grease or fingerprint from sink. Rub gently with the grain. Installation is now complete.

08/06/2015 INS11609C-1A S0000058324
Released 00

台下盆安装说明

注意：以下安装适用于大理石台面。

Undercounter Installation

Note: The steps below are for marble topcount kitchen cabinets.

1

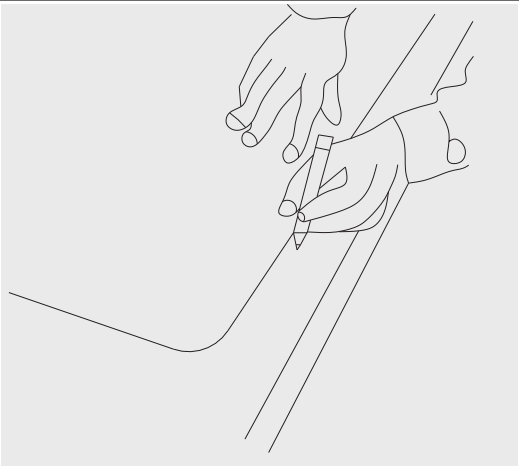

将您的厨具台面清洁干净，把所提供的开孔板放在厨具台面需要安装水槽的合适位置上。按住开孔板，用记号笔按开孔板台下安装开孔画线。**注意：不要用擦不掉的记号笔。**

Prepare countertop by cleaning off all dirt and abrasives. Position the provided cut-out template on countertop in desired position. Hold the template in place. Draw a line along the edge of the undermount installation line on the template. **CAUTION: Do not use indelible markers etc. which cannot be removed later.**

2

拿开开孔板。在切割线内侧钻一个直径为3/8英寸（10mm）的孔，用以放入切割锯的锯条。沿着所划的切割线，切割出厨盆安装口。在切割完时，请扶住切割部分以免切割口爆裂。

Remove the template. Drill a 3/8'' (10mm) dia. hole for the saber saw blade on the inside edge of the cutout. Cut sink opening using the cutout line as your guide. Brace cutout portion as you complete cut to avoid splintering edge of hole.

3

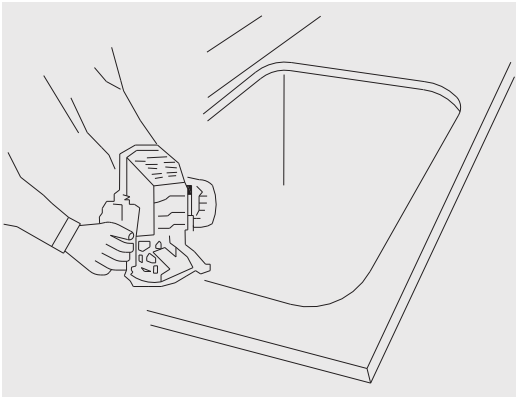

用修边机，锉刀和砂纸修平切口边缘，修出所需圆角。

Make opening edges and desired round corners smooth with a grinder, files, and sandpaper.

4

把台面翻转，在距切口周边大约1/4英寸（6.4mm）处涂上宽度为1/8–1/4英寸（3.2–6.4mm）的大理石专用胶。太多的复合胶会造成厨盆密封困难。同时，准备一些2英寸（ 50mm）宽的大理石条。

Turn the countertop upside down, and apply marble sealant which is 1/8'' to 1/4'' (3.2 to 6.4mm) wide around all edges of sink opening towards approximately 1/4'' (6.4mm) from cutout. Too much sealants will make sink diffcult to seal. At the same time, prepare several pieces of 2 inch (50mm) wide marble bars.

INSTMOEN 2009 INSTMOEX-1A 500000569524
Released.001

5

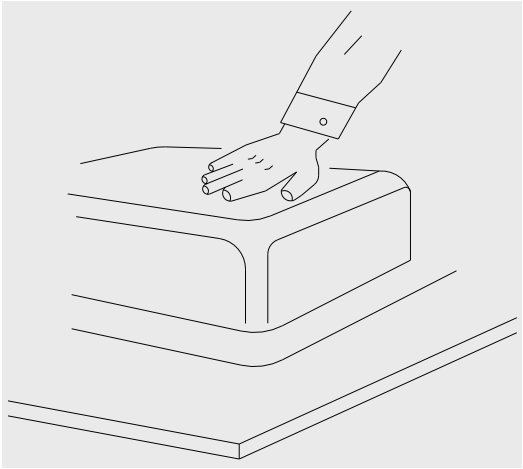

将厨盆粘贴在您的厨柜台面上，并对准位置。

Stick the sink on countertop and position them.

6

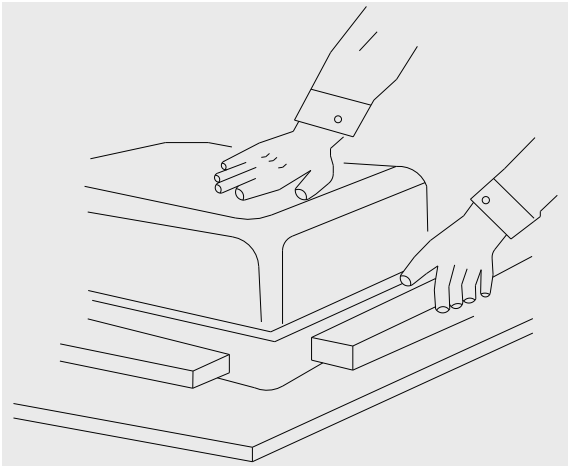

在大理石条上涂上复合胶，将它们粘贴在厨盆四周边缘，并加压重，保证石条压住盆边3/8–1/2英寸（10–12mm）。

Apply caulking compound on the marble bars. Stick them to the rim of sink, and then put weight on them. Make sure that the marble bars cover 3/8" to 1/2" (10 to 12mm) of the rim.

7

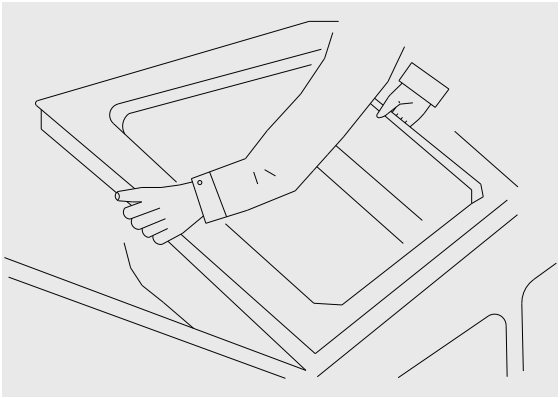

粘结牢固后，将装好厨盆的台面翻转，并安装在橱柜上。

After the caulking get secure, turn over the countertop with the sink and install it in position.

8

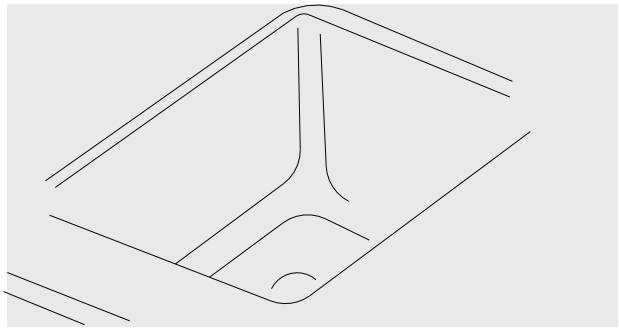

清除台面上的粘胶，用湿布或海棉和温和的清洁剂去除厨盆上的任何油渍和手印，可掺入一些磨料，轻轻擦洗。安装完毕。

Clean up all excess caulking and pencil marks from countertop. Use a wet cloth or sponge and a mild cleanser to remove any grease or fingerprints from sink. Rub gently with the grain. Installation is now complete.

09/04/2015 INS11609C-1A S0000568324
Released 00

产品保养

注意事项：

• 厨盆使用完毕后，及时用清水冲洗并擦干，不要将锅、餐具或积水留在水槽里。

• 请使用海绵或软布清洁厨盆，不要使用钢丝球等有磨损性工具擦洗厨盆，可能会导致水槽表面损坏。

• 对付污渍，请勿使用含氨、漂白剂等研磨性清洗剂清洗厨盆，容易对厨盆造成腐蚀。建议定期地使用温和的洗涤剂清洁并用清水冲洗干净。

• 当用温和的洗涤剂清洁时，用软布涂抹清洁剂轻轻擦洗，然后用清水冲洗干净后用软布擦干。

• 不要在厨盆里使用橡皮垫，因为橡皮垫下的污垢很难清除。

• 含重金属成份的水（重水）会导致厨盆变色或产生锈斑，发生这种现象可在每次用完之后用毛巾擦干。

• 不要让强力漂泊粉、家用化学品和肥皂长时间接触您的厨盆，如果发生上述情况，请立刻用水清洗并擦干。

Care and Cleaning

Important Information:

• Rinse sink after use and wipe dry timely, do not leave pots, utensils or standing water in the sink.
• Please use a sponge or soft cloth to clean the sink. Do not use abrasive tools such as steel wool to clean the sink, which may cause damage to the surface of the sink.
• For stubborn stains, do not use abrasive cleaning agents such as ammonia and bleach to clean the kitchen sink, which can easily cause corrosion to the sink. It is recommended to clean regularly with mild detergent and rinse well with water.
• When cleaning with mild detergent, gently scrub with a soft cloth applying detergent, then rinse well with water and dry with a soft cloth.
• Do not use rubber mats in sink, since the materials trapped under mats are hard to clean.
• Water with heavy metals (hard water) may result in a brown or rust colored stain. If noticed, dry the sink with towel after each use.
• Avoid strong bleaching powder, household chemi-cals and soaps from coming in contact with the sink. If it occurs, rinse and wipe dry quickly.

08/06/2025 INS116690C-1A 5000058524
Released 00

产品售后保修条款

摩恩产品是在高质量标准及生产工艺下制造的，摩恩承诺为消费者购买的洁具产品提供有期限免费保修及终身维修服务。

不锈钢厨盆免费保修期为5年，均自消费者购买日（以摩恩产品分销商开具的发票或收据上载明日期为准）起计。免费保修范围为产品及产品配件（落水以及溢水等）由于材质及工艺原因而造成的故障或损坏。免费保修期内，我们将无偿为您提供修理服务及更换发生故障的产品或产品配件。摩恩的售后服务责任仅限于对故障产品的修理，而不延及您因产品故障而发生的其他损失，法律另有规定的除外。

您需了解：产品外观碰伤、刻划痕迹，以及滥用及不正当保养所导致的故障或损坏，均不属于免费保修范围。即使在免费保修期内，属下列（1）–（5）情况之一的，需酌情收取修理费用：

1. 不能出示相符的保修卡和有效购买凭证情况的，
2. 未按使用说明书告知的使用方法和注意事项造成的故障，
3. 自行拆卸、维修、改装所造成的故障和损坏，
4. 由于不可抗力等外部原因引起的故障和损坏，
5. 由于运输、搬卸、挤压等造成的损坏。

对于保修期外或不在保修范围内的产品，如需维修，摩恩将酌情收取上门费、人工费及材料费。

本保修条款仅对原始消费者和酒店行业的购买者有效，并不适用于本产品在工业，商业，贸易和非酒店行业的使用。

如对本保修条款内容有任何疑问，请拨打400 630 8866咨询热线，或向当地分销商咨询。

MOEN® 摩恩

合 格 证

Compliance Certification

产品名称 Product Name: 净洁不锈钢厨盆 Easy-cleaning Stainless Steel Sink

检验员 Inspector _____

生产日期 Date of Production _____

富俊汇赢科技（上海）有限公司

中国（上海）自由贸易试验区新杨公路1800弄1号4幢207室

邮编：201413

Fortune Brands Innovations (Shanghai) Co., Ltd

Room 207, Building 4, No.1, Lane 1800, Xinyang Highway, China (Shanghai) Pilot Free Trade Zone

MOEN LIMITED WARRANTY

We offer limited warranty and lifetime maintenance for Moen products, which are all manufactured with high standards of workmanship.

The period of warranty shall start from the date of purchase of the product (according to the invoice or receipt issued by Moen distributors) and shall cover a period of the following: the warranty period for stainless steel sink is 5 years.

This warranty is your coverage against material and workmanship malfunction or defects in Moen products or components (Pipe kit etc.). During the warranty period, we offer free maintenance and changing of malfunctioned products or product components. Moen's after sales service liability is limited to the maintenance of faulty items and does not cover your other losses caused by product malfunction, except for otherwise stipulated by law.

Cosmetic damages (scratches, dents, etc.) and malfunction or defects caused by abuse or improper maintenance is not covered by this warranty. Although the warranty period remains valid, in case of the following conditions (1) - (5), the maintenance cost (material cost and labor cost) shall still be charged as the case may be:

1. Corresponding warranty card and valid invoice cannot be presented;
2. Faults were caused by the incompliance with the instructions and precautions provided in the user's manual;
3. Damages and faults were caused by self-actuated dismantling, repair and refit;
4. Faults and damages were caused by external factors such as force majeure;
5. Damages were caused by transportation, unloading and extrusion, etc.

This warranty is valid for the original consumers only (including hotel use), and excludes industrial and commercial use of the product (except for hotel use). This card is only responsible for product maintenance rather than any other liabilities.

In the event that the product requires maintenance but exceeds the warranty period, or that the product is not covered by this warranty, labor cost and material cost shall be charged as the case may be. Please call 400-630-8866 or contact local dealer for any question.

©2023 Moen Incorporated

MOWM2023 INST1809C-1A 500000569524 Released.001