MOEN® 摩恩

Specifications

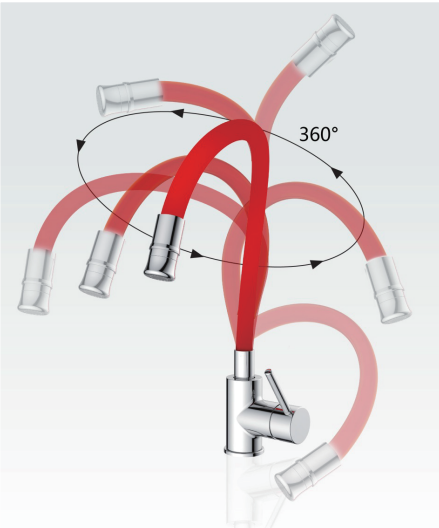

KEY WEST

High Soft Flexible Hose

MODELS: GN60418 series

NOTE:This faucet is designed to be installed thru 33mm min. to 38mm max. dia. hole.

DESCRIPTION

- Chromed metal surface, colorful flexible outlet tube
- G1/2 inlet tube connector
- 600mm inlet tube
- Flexible hose can rotate at 360°
- Freely switch between 2 functions outlet mode

OPERATION

- Lever style handle
- Pull-on / Push-off
- Controlled through 90 degree arc of handle travel
- Rotate to switch outlet water

FLOW

- Flow rate is about 3.5L/min to 4.0L/min at 0.1Mpa

CARTRIDGE

- Φ35mm Ceramic cartridge

STANDARD

- GB18145-2014, GB25501-2019 (Grade 1)

WARRANTY

- 5 years limited warranty against leaks and drips

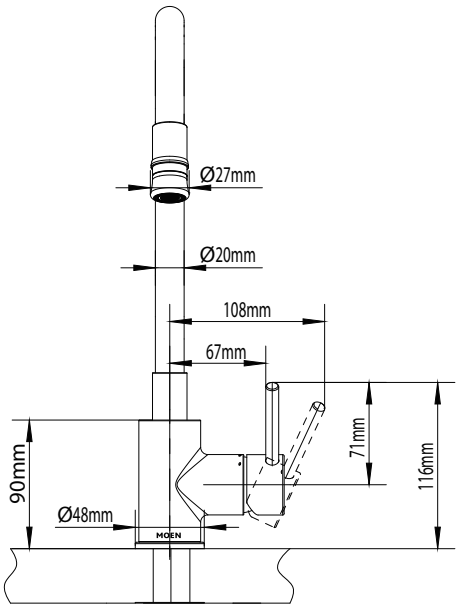

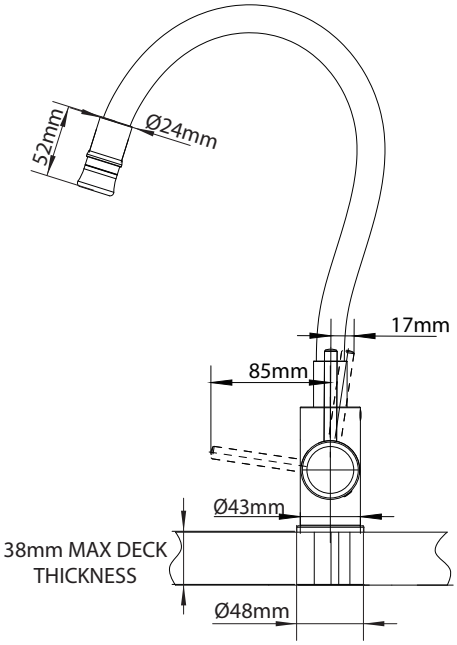

CRITICAL DIMENSIONS DO NOT SCALE

©2020 Moen Incorporated