MOEN

Specifications

DESCRIPTION

- Baden series Dual bowl drop-in sink
- 304 Stainless steel construction , Polish nickel finished
- One faucet hole ,One dispenser hole as indicated
- L-sheet mounting system , hardware included
- SoundSHIELD sound absorbing system

STANDARD

- Comply with QB/T4013-2010

WARRANTY

- 5 years limited lifetime warranty against material or manufacturing defects to the original consumer purchaser

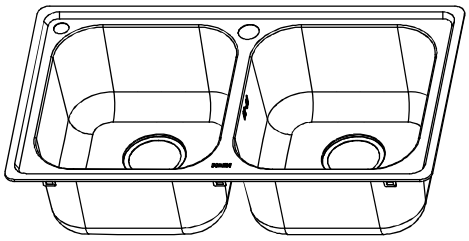

Stainless steel sink

Models: 29101SL

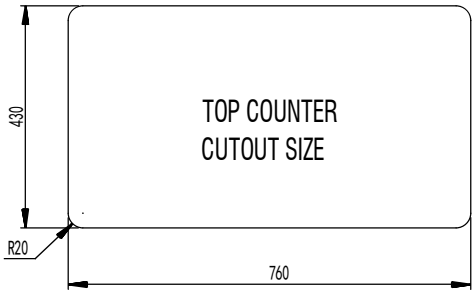

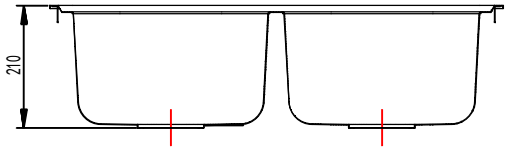

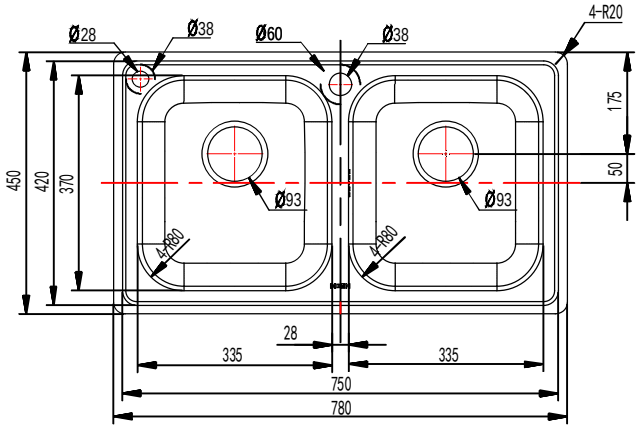

CRITICAL DIMENSION

(DO NOT SCALE)

Rev 01/27/2015