MOEN® 摩恩®

规格书
SPECIFICATIONS

描述
- 不锈钢单槽
- 产品尺寸：400 X 400 X 200mm
- 304不锈钢，厚度：1.0mm
- 台下安装方式，配安装五金件
- 台下开孔尺寸：350 X 350 X R10mm
- 消音处理

执行标准
（凡不注明日期，即为最新版本）
- GB/T 38474–2020

质保期
- 水槽本体有限质保5年
- 水槽配件有限质保2年

DESCRIPTION
- Stainless steel single bowl sink
- Product dimensions: 400 X 400 X 200mm
- SS.304 construction, thickness: 1.0mm
- Undermount mounting hardware included
- Undermount cutout size: 350 X 350 X R10mm
- Sounds shield system

STANDARD
(Unless otherwise dated, it is considered to be the latest version)
- GB/T 38474-2020

WARRANTY
- 5 years limited warranty for sink body
- 2 years limited warranty for sink accessories



夏格
不锈钢水槽

Shaker Series
Stainless Steel Sink

型号 MODELS: SK35141 Series

型号/SKU	落水头/Strainer	排水管/Pipe	盖板/Cover	表面颜色/Moen Color
SK35143LB	XS071-1*	XS071-2*	SKA06B	枪灰色PVD纳米涂层 Gunmetal gray PVD and nano coating
SK35143-B	/	/	/	枪灰色PVD纳米涂层 Gunmetal gray PVD and nano coating
SK35141K	XS070-1*	XS070-2*	SKA06	拉丝/Brush
SK35141	/	/	/	拉丝/Brush

注：关于配件详细尺寸，外部配件（带*号）请见下页，其他请在摩恩官网搜索配件号查询。
Note: For detailed accessory dimensions, please refer to the next page for external parts (marked with *) or search by part number on Moen website.

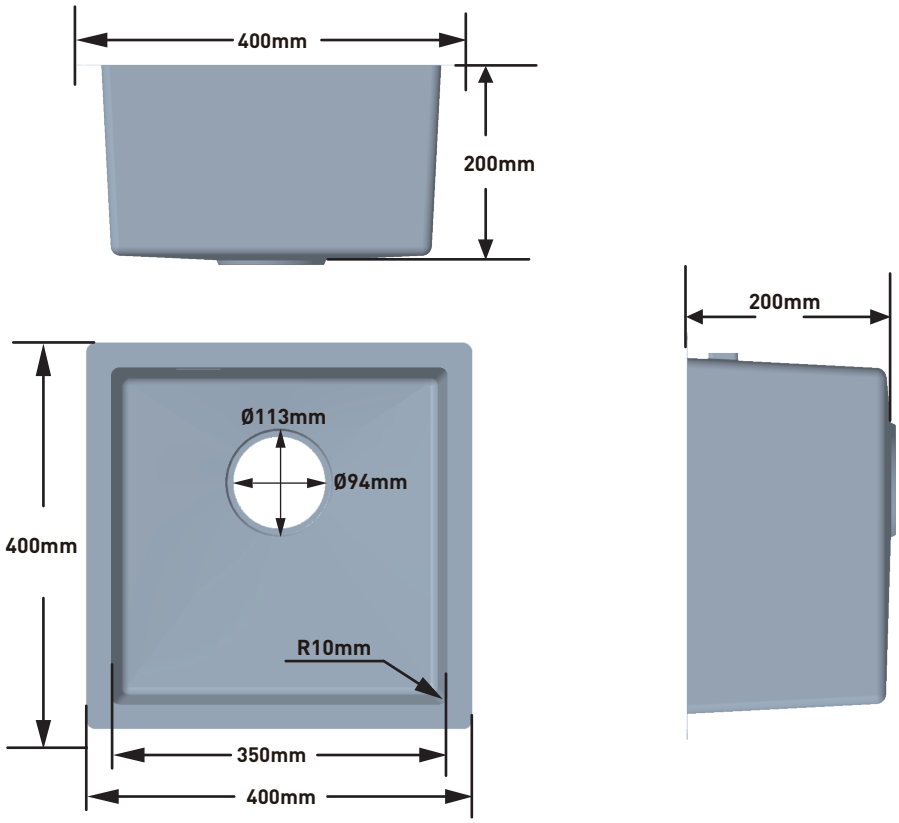

©2026 Fortune Brands Innovations Incorporated

对于中国大陆以外的市场，请咨询当地经销商
订购零件: (中国大陆) 400-630-8866
(中国大陆) www.moen.cn
(中国大陆以外) www.moen.com.hk

For consumers in markets outside the Chinese mainland, please consult the local dealer
TO ORDER PARTS CALL: (Chinese Mainland) 400-630-8866
(Chinese Mainland) www.moen.cn
(Outside Chinese Mainland) www.moen.com.hk

07/12/2026, SPC27250, 3000040029
Rev000040101

MOEN® 摩恩®

规格书
SPECIFICATIONS

落水头
Strainer
XS070-1/XS071-1 Series

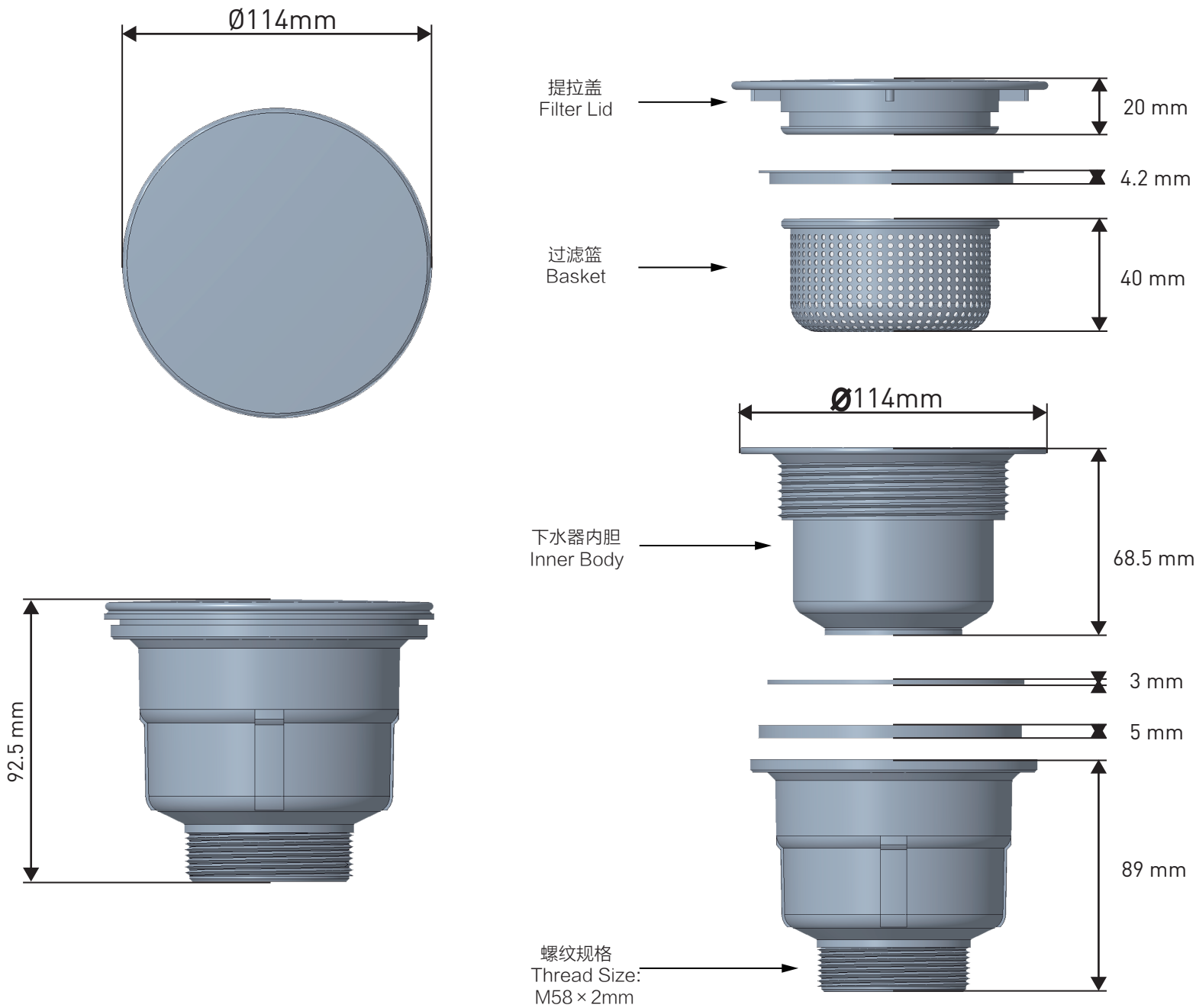

07/15/2026 SPC27250 5000074039
Released 00

MOEN® 摩恩®

规格书
SPECIFICATIONS

排水管
Drain Pipe
XS070-2/XS071-2 Series

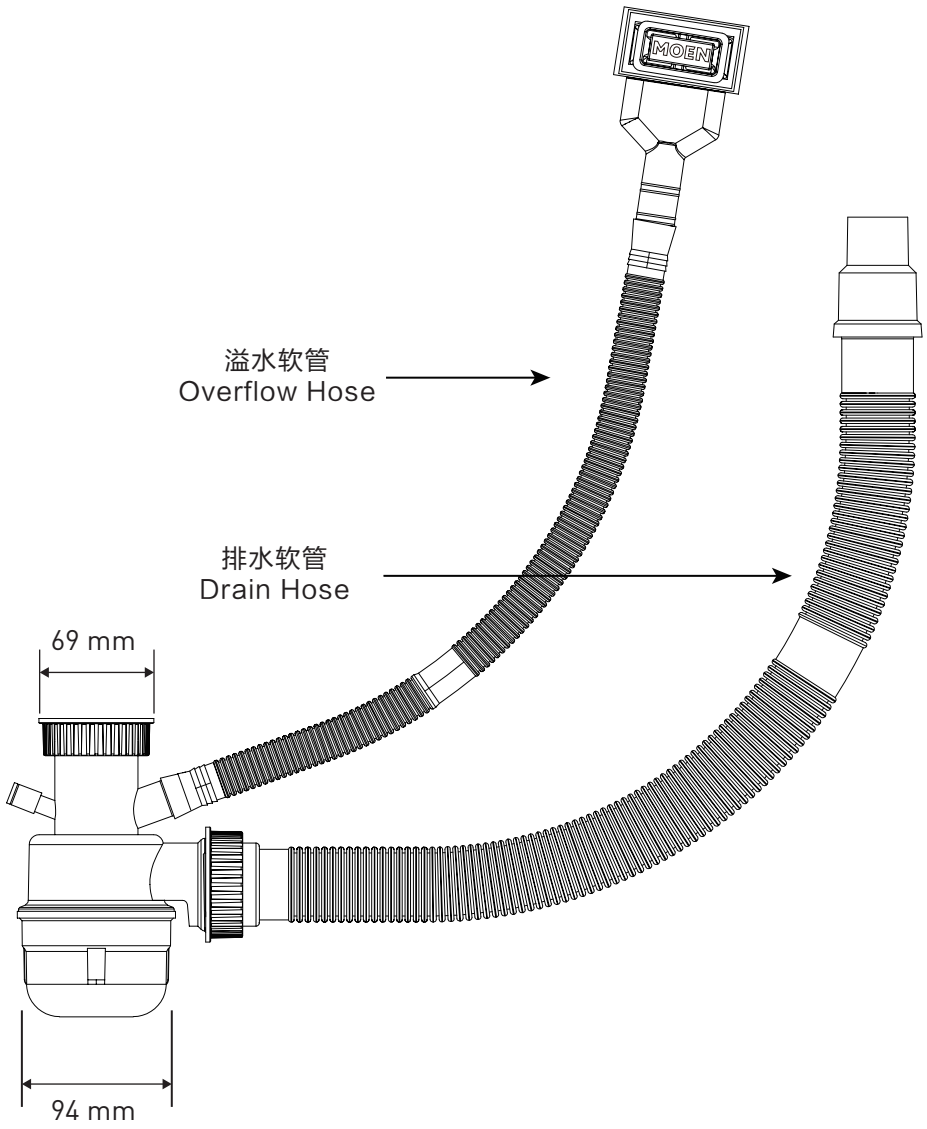

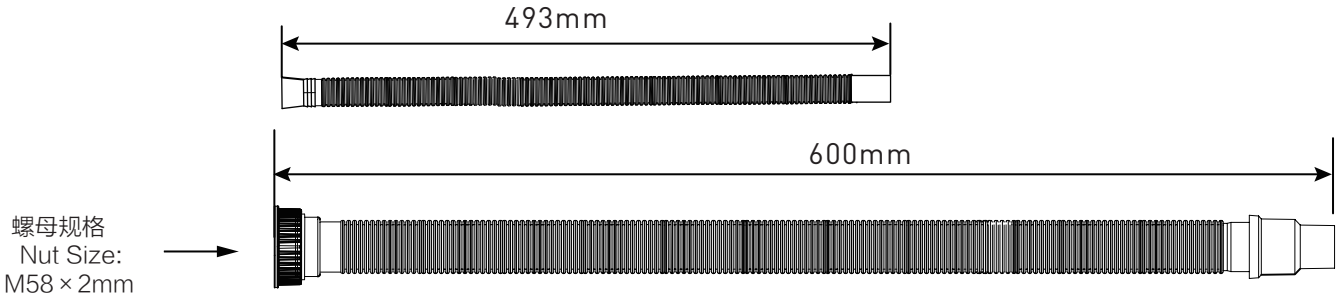

07/13/2026 SPC27250 5000074039
Released 00