MOEN® 摩恩®

规格书
SPECIFICATIONS

产品描述
- 多功能单槽
- 产品尺寸：800 X 480 X 224mm
- 304不锈钢
  厚度：盆胆0.8mm
- 台上开孔尺寸：768 X 448 X R29mm
- 台下开孔尺寸： 760 X 440 X R25mm
- 台下安装方式，配安装五金件
- 消音处理

执行标准
（凡不注明日期，即为最新版本）
- 符合GB/T 38474

质保期
- 水槽本体有限质保5年
- 水槽配件有限质保2年

DESCRIPTION
- Multifunctional single bowl sink
- Product dimensions: 800 X 480 X 224mm
- 304 stainless steel
  Thickness: bowl 0.8 mm
- Top-mount cutout size:768 X 448 X R29mm
- Undermount cutout size: 760 X 440 X R25mm
- Undermount mounting hardware included
- Sounds shield system

STANDARD
(Unless otherwise dated, it is considered to be the latest version)
- Conforms to GB/T 38474

WARRANTY
- 5-year limited warranty for sink body
- 2-year limited warranty for sink accessories

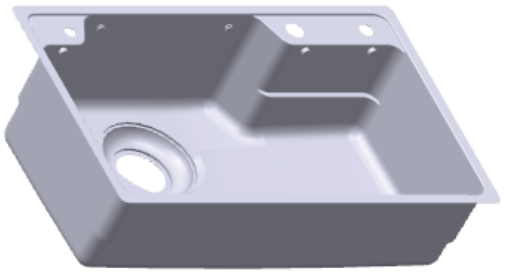

博锐
多功能水槽

Blade Series
Multifunctional Sink

型号 MODELS: SK74812A Series

型号 SKU	落水头 Strainer	排水管 Drain Pipe	菜板 Cutting Board	槽中槽 Bowl in Bowl	不锈钢挂篮 SS Hanging Basket	滤网 Strainer Filter	表面颜色 Color
SK74812A	SB10	SB012RMCL01	SKA38	SKA68	74812挂篮*	SKA03	亚光 Satin
SK74812	N/A	N/A	N/A	N/A	N/A	N/A	亚光 Satin
SK74813AB	SB10	SB012RMCL01	SKA38E	SKA68B	74812挂篮*	SKA03	纳米枪灰 Nano Gunmetal PVD
SK74813-B	N/A	N/A	N/A	N/A	N/A	N/A	纳米枪灰 Nano Gunmetal PVD
SK01101A	SB10	SB012RMCL01	SKA38	SKA68	74812挂篮*	SKA03	亚光 Satin
SK01101AB	SB10	SB012RMCL01	SKA38	SKA68B	74812挂篮*	SKA03	纳米枪灰 Nano Gunmetal PVD
SK74814A	SB13	SB012MCL03(加长)	SKA38	SKA68	74812挂篮*	SKA03	火山纹 Volcano Pattern
SK74814AB	SB13	SB012MCL03(加长)	SKA38E	SKA68B	74812挂篮*	SKA03	火山纹 纳米枪灰 Volcano Pattern Nano Gunmetal PVD

注：关于配件详细尺寸，外部配件（带*号）请见下页，其他请在摩恩官网搜索配件号查询。
NOTE: For detailed accessory dimensions, please refer to the next pages for external parts (marked with *) or search by part number on Moen website.

©2026 Fortune Brands Innovations Incorporated

对于中国大陆以外的市场，请咨询当地经销商
订购零件: (中国大陆) 400-630-8866
(中国大陆) www.moen.cn
(中国大陆以外) www.moen.com.hk

For consumers in markets outside the Chinese mainland, please consult the local dealer
TO ORDER PARTS CALL: (Chinese Mainland) 400-630-8866
(Chinese Mainland) www.moen.cn
(Outside Chinese Mainland) www.moen.com.hk

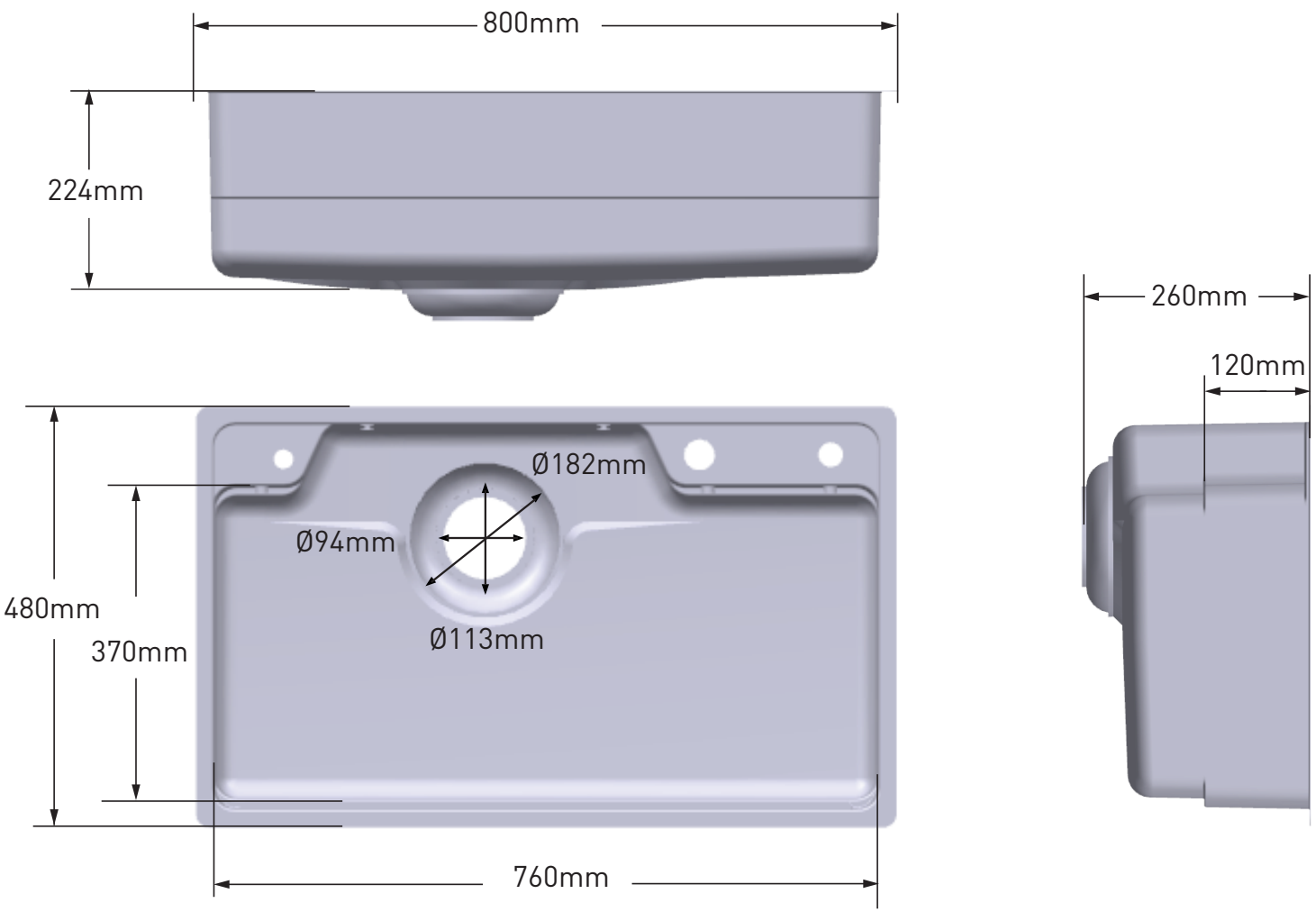

©2026 Fortune Brands Innovations Incorporated

对于中国大陆以外的市场，请咨询当地经销商
订购零件: (中国大陆) 400-630-8866
(中国大陆) www.moen.cn
(中国大陆以外) www.moen.com.hk

For consumers in markets outside the Chinese mainland, please consult the local dealer
TO ORDER PARTS CALL: (Chinese Mainland) 400-630-8866
(Chinese Mainland) www.moen.cn
(Outside Chinese Mainland) www.moen.com.hk

MOEN® 摩恩®

规格书
SPECIFICATIONS

产品描述
- 挂篮
- 产品尺寸：392 x 245 x 121mm
- 材质:不锈钢

执行标准
（凡不注明日期，即为最新版本）
- 符合Q/MESN 4

质保期
- 2年有限保修，人为损坏和化学品侵蚀除外

DESCRIPTION
- Sink caddy
- Product dimensions: 392 x 245 x 121mm
- Material:Stainless steel

STANDARD
(Unless otherwise dated, it is considered to be the latest version)
- Conforms to Q/MESN 4

WARRANTY
- 2-year limited warranty excluding damage from misuse and chemical corrosion

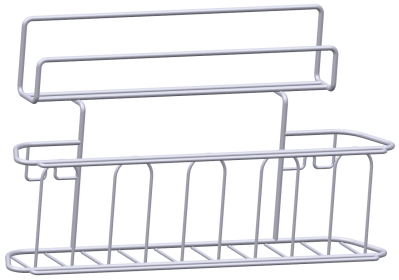

型号/SKU	表面颜色/Color
74812挂篮	亚光/Satin

挂篮

Sink Caddy

型号 MODELS: 74812挂篮

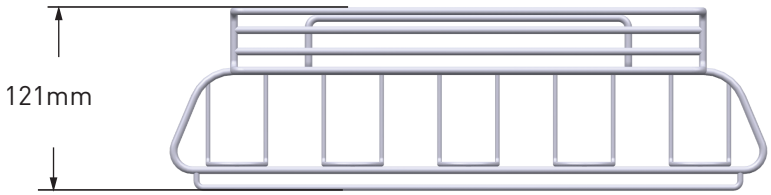

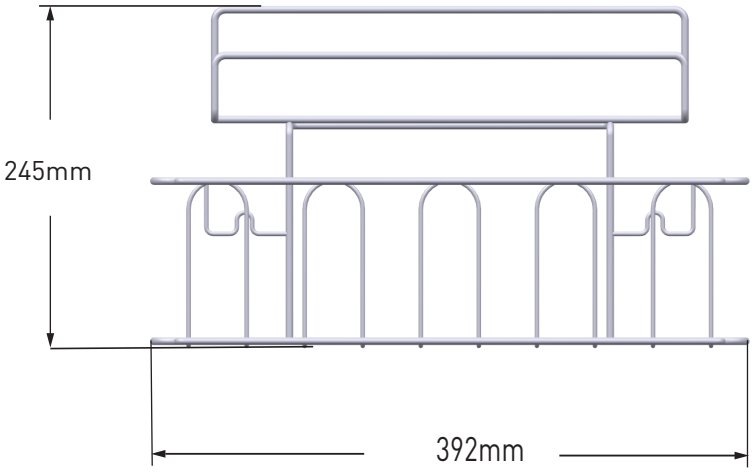

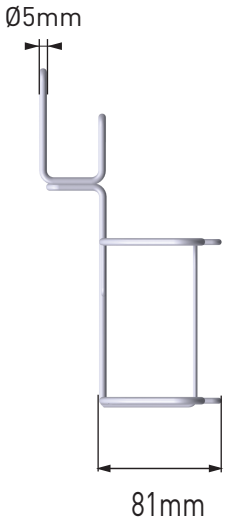

©2026 Fortune Brands Innovations Incorporated

对于中国大陆以外的市场，请咨询当地经销商
订购零件: (中国大陆) 400-630-8866
(中国大陆) www.moen.cn
(中国大陆以外) www.moen.com.hk

For consumers in markets outside the Chinese mainland, please consult the local dealer
TO ORDER PARTS CALL: (Chinese Mainland) 400-630-8866
(Chinese Mainland) www.moen.cn
(Outside Chinese Mainland) www.moen.com.hk